On discrete boundaries and solution accuracy in anisotropic adaptive meshing

Konstantin Lipnikov

Theoretical Division, Los Alamos National Laboratory

lipnikov@lanl.gov

Yuri Vassilevski

Institute of Numerical Mathematics, Russian Academy of Sciences

vasilevs@dodo.inm.ras.ru

Contents

- Motivation
- Hessian-based surface reconstruction
- Error estimates
- Numerical experiment
- Conclusion

Motivation

- Anisotropic adaptive meshes improve accuracy of the simulation

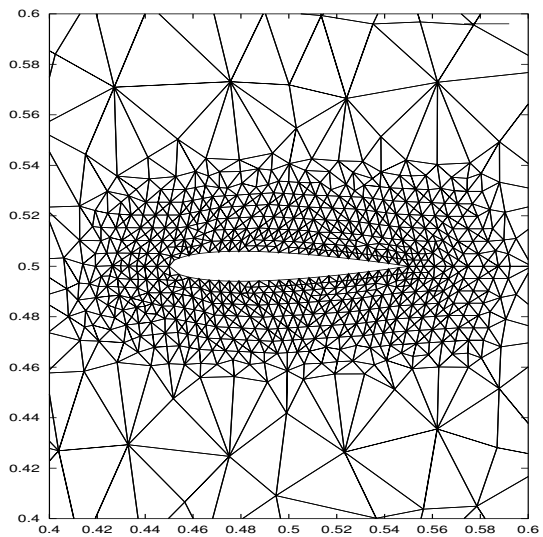

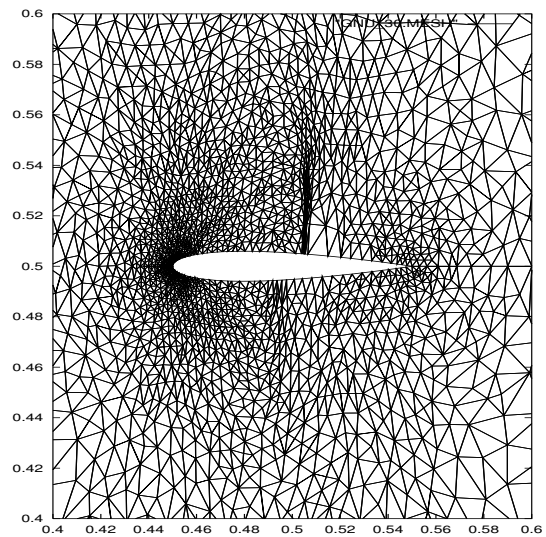

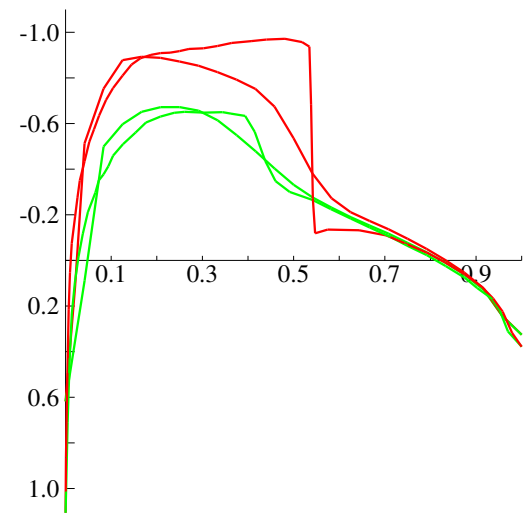

Motivation (cont.)

- The final error is no better than the surface approximation
- The approximation may be improved with Higher Order Reconstruction Methods

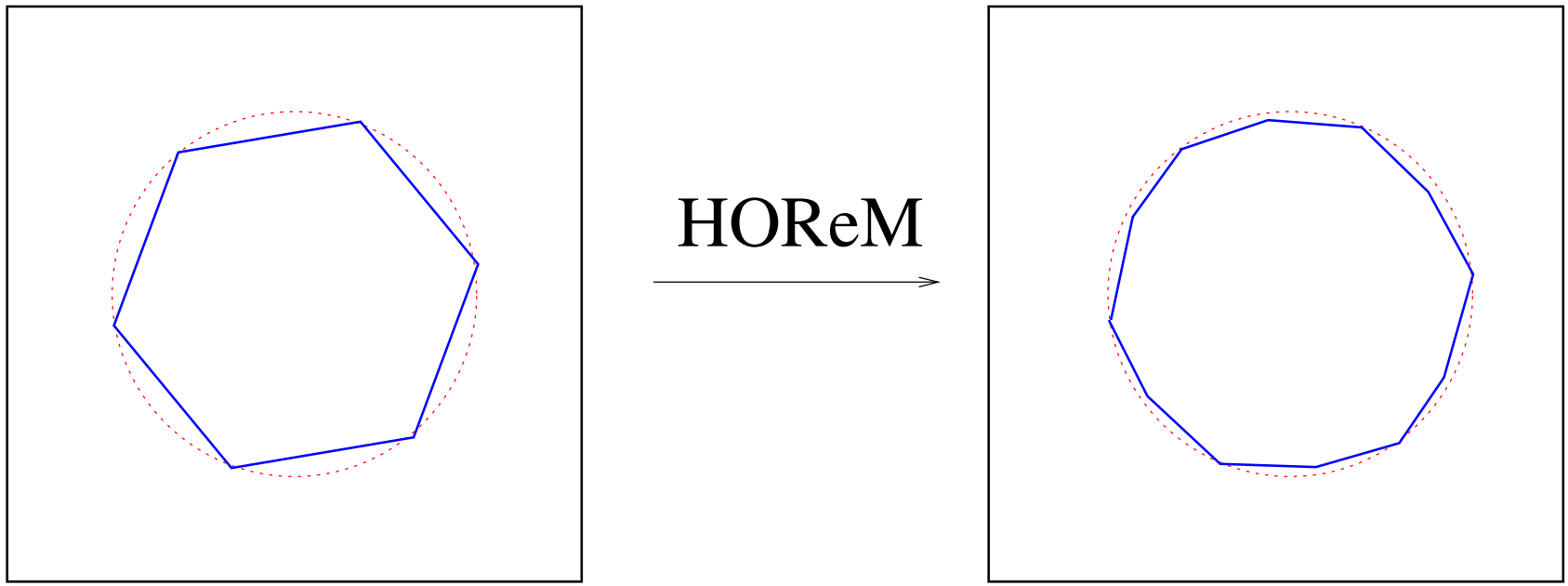

Motivation (cont.)

- Hessian-Based Adaptation Methods (HeBAM):
  - provide methodology for approximating the Hessian of a piecewise-linear function;
  - are supported by a number of theoretical results;
  - are exact for quadratic functions u.

Motivation (cont.)

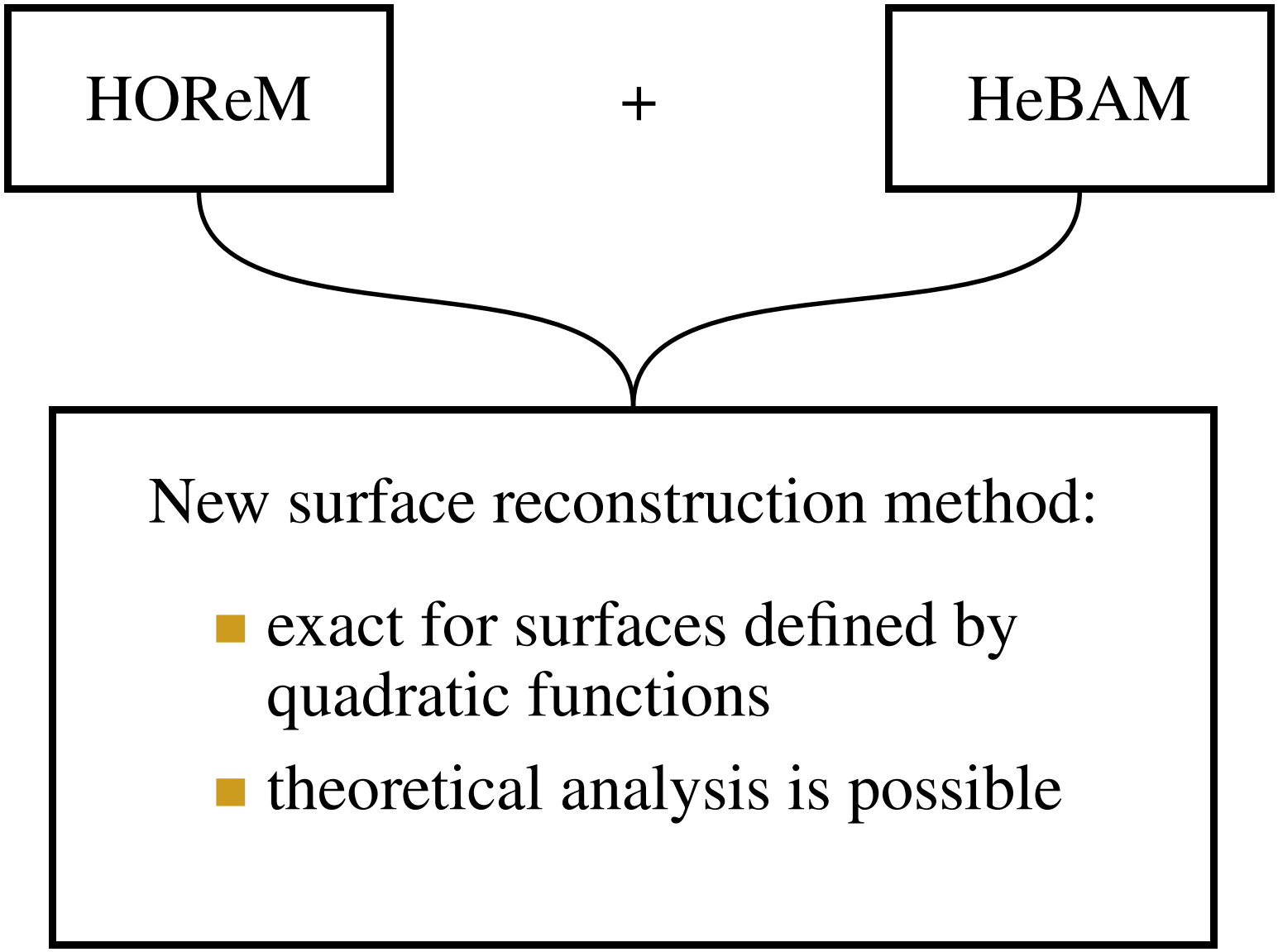

Hessian-based surface reconstruction

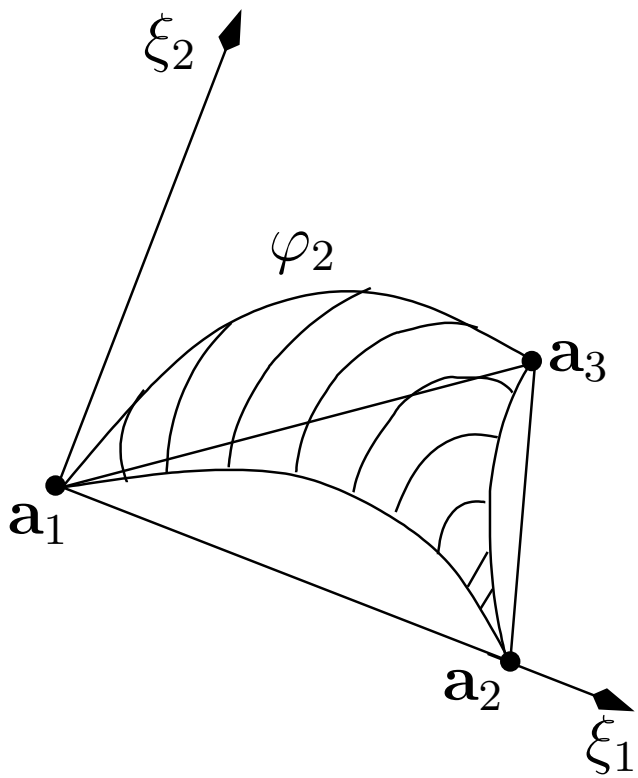

surface triangle t and quaratic function φ_2

- 2D multi-point Taylor formula reads

$$\varphi_2(\boldsymbol{\xi}) = -\frac{1}{2}\sum_{i=1}^{3}(\mathbb{H}_2(\boldsymbol{\xi}-\mathbf{a}_i),\ (\boldsymbol{\xi}-\mathbf{a}_i))\, p_i(\boldsymbol{\xi})$$

- Lemma. Components of $\mathbb{H}_2$ are uniquely defined by three numbers:

$$\alpha_i = (\mathbb{H}_2\, \boldsymbol{\ell}_i,\ \boldsymbol{\ell}_i), \qquad \boldsymbol{\ell}_i = \mathbf{a}_{i+1} - \mathbf{a}_i,$$

where $i = 1, 2, 3$.

Hessian-based surface reconstruction

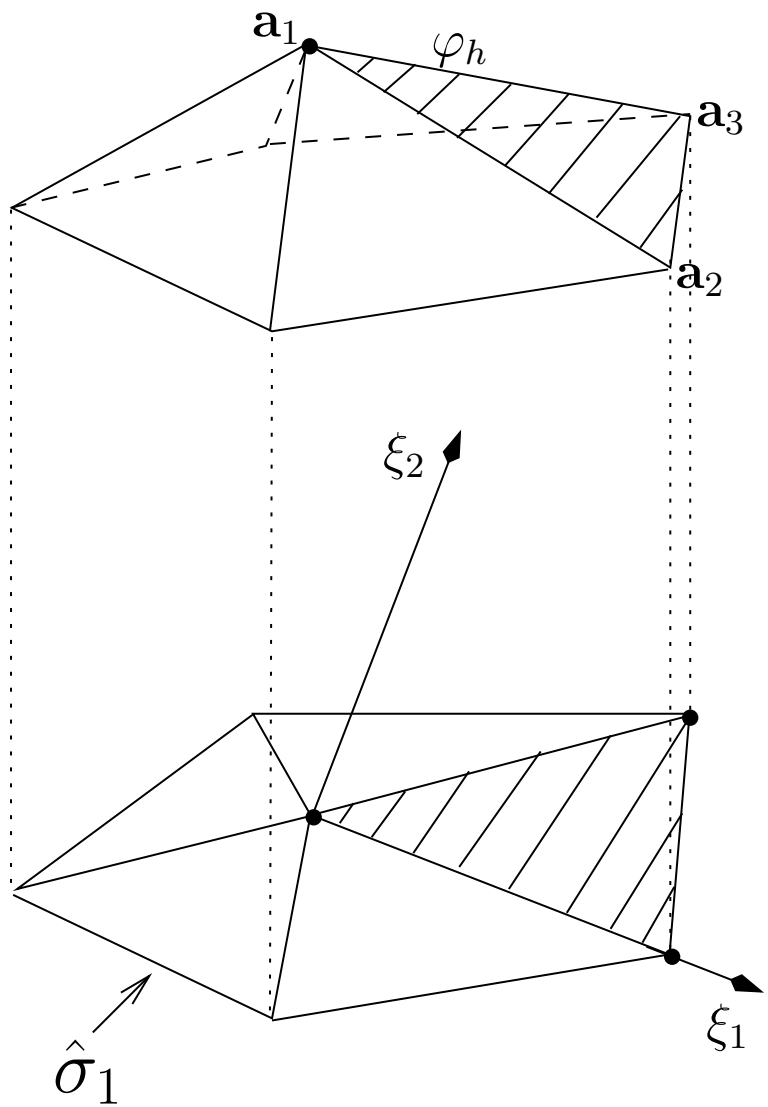

surface patch and its projection on $\xi_1\,\xi_2$-plane

- Let $\varphi_h(\boldsymbol{\xi})$ defines the piecewise linear surface.

- The components of $\mathbb{H}_h(\mathbf{a}_1) = \{\mathbb{H}_{h,i,j}(\mathbf{a}_1)\}$ are defined in a weak sense by

$$\int_{\hat{\sigma}_i} \mathbb{H}_{h,i,j}(\mathbf{a}_1)\psi_h \,\mathrm{d}S = -\int_{\hat{\sigma}_i} \frac{\partial \varphi_h^i}{\partial \xi_i}\frac{\partial \psi_h}{\partial \xi_j}\,\mathrm{d}S$$

for any piecewise linear function ψ_h vanishing on $\partial\hat{\sigma}_1$.

Hessian-based surface reconstruction

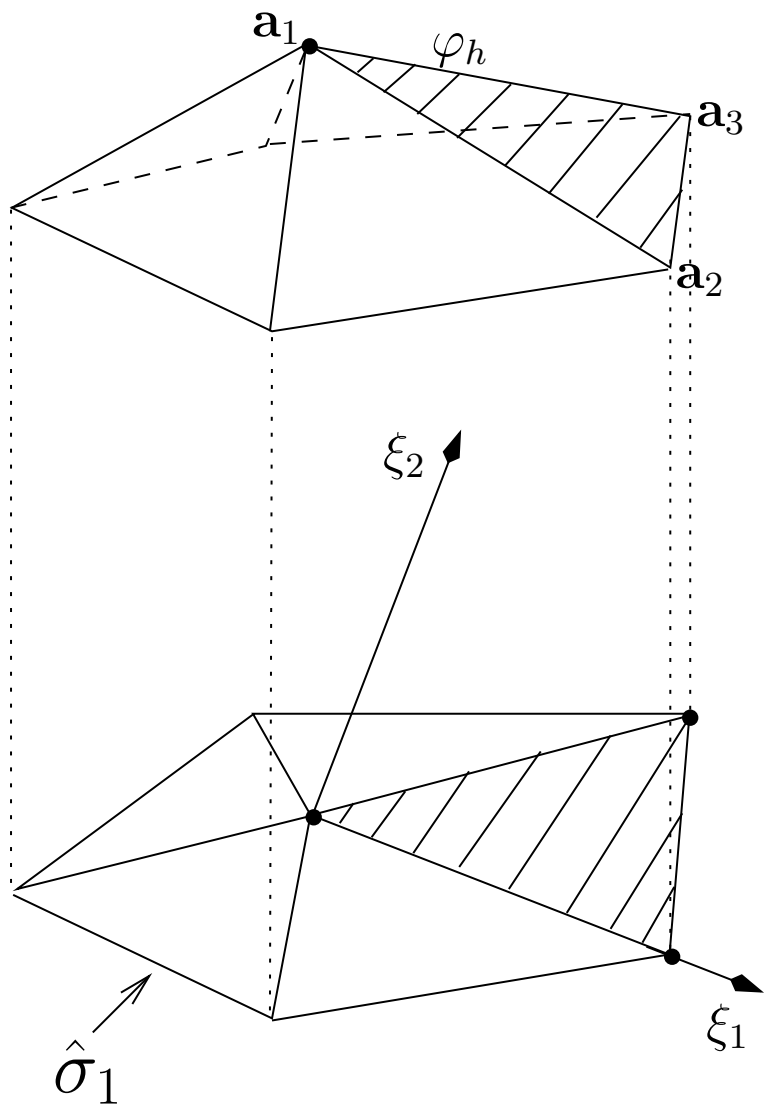

surface patch and its projection on $\xi_1\,\xi_2$-plane

- Define α_i as follows:

$$\alpha_i = \left(\frac{\mathbb{H}_h(\mathbf{a}_i) + \mathbb{H}_h(\mathbf{a}_{i+1})}{2} \boldsymbol{\ell}_i,\, \boldsymbol{\ell}_i \right)$$

- Lemma. Quadratic surfaces are recovered exactly.

- The reconstruction is invariant of the choice of $\xi_1\,\xi_2$-plane.

Error estimates

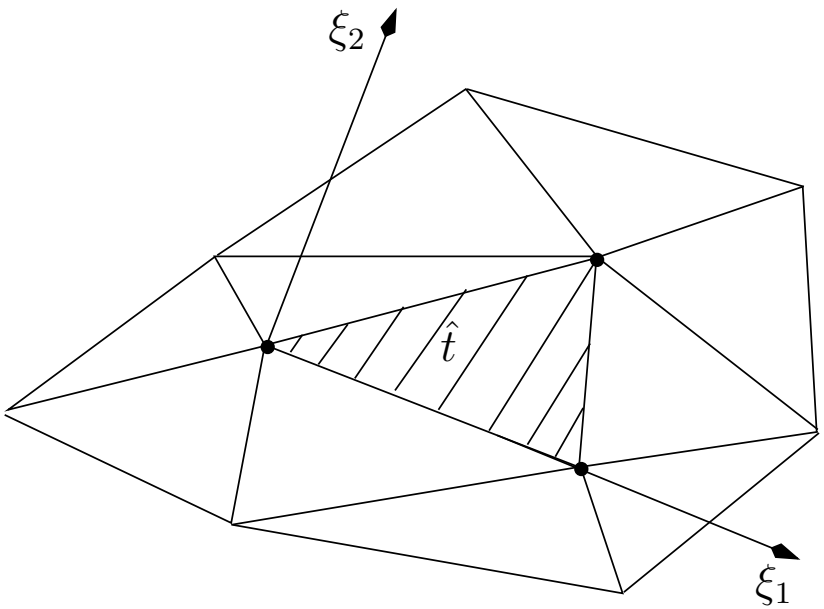

superelement $\hat{\sigma}_t$

- Assume that superelement $\hat{\sigma}_t$ is quasi-uniform with size h.

- Assume small variation of the exact Hessian:

$$\|\mathbb{H} - \bar{\mathbb{H}}(\boldsymbol{\xi}^*)\|_{L_\infty(\hat{\sigma}^t)} \leq \delta;$$

$\boldsymbol{\xi}^*$ is a point where $\mathbb{H}$ attains $\max|\det(\mathbb{H})|$.

- Assume small gradient error

$$\|\nabla\varphi - \nabla\varphi_h\|_{L_2(\hat{\sigma}^t)} \leq \varepsilon$$

Error estimates (cont.)

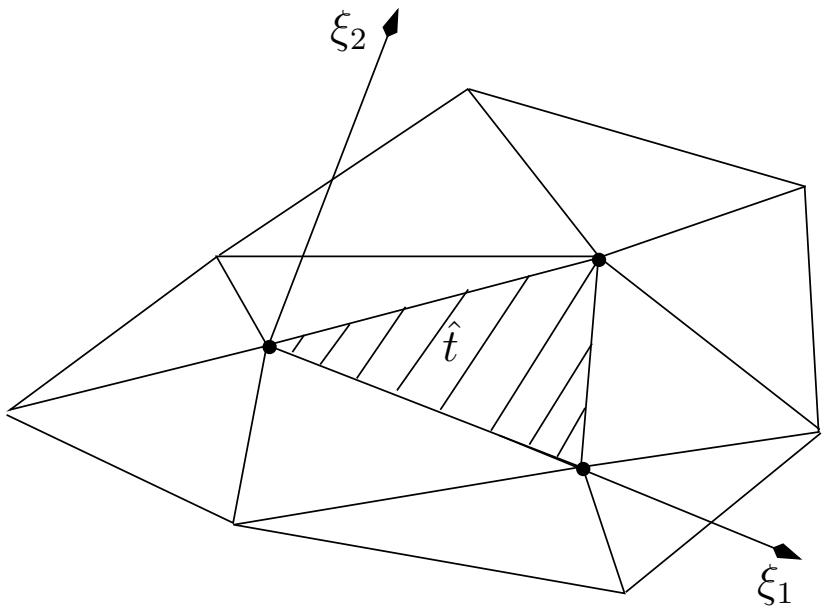

superelement $\hat{\sigma}_t$

Theorem. Under the above assumptions, the reconstructed function φ_2 satisfies:

$$\|\varphi - \varphi_2\|_{L_\infty(\hat{t})} \leq C(\varepsilon + \delta h^2).$$

Error estimates (cont.)

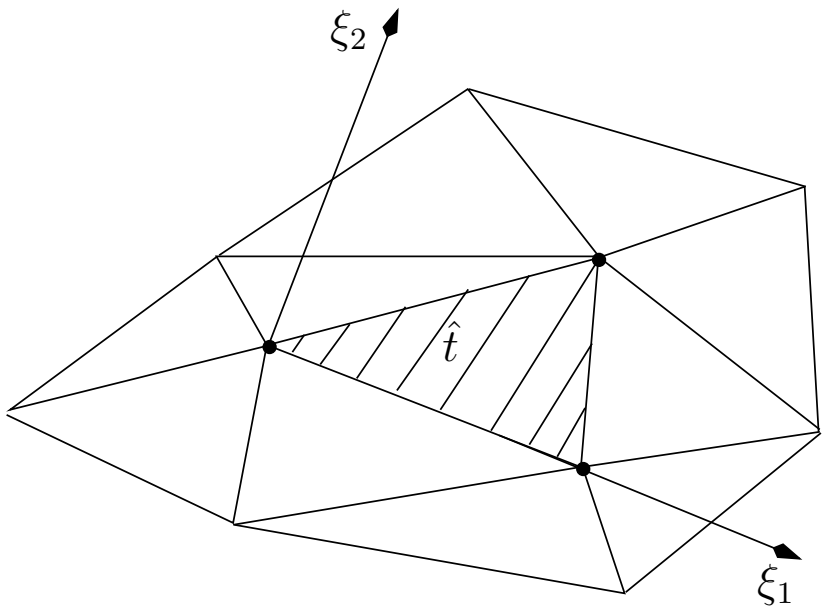

superelement $\hat{\sigma}_t$

Theorem. Under the above assumptions, the reconstructed function φ_2 satisfies:

$$\|\varphi - \varphi_2\|_{L_\infty(\hat{t})} \leq C(\varepsilon + \delta h^2).$$

Corollary. For smooth surfaces ($\varphi \in C^3(\hat{\sigma}^t)$), we get $\delta \sim h$, $\varepsilon \sim h^3$, and

$$\|\varphi - \varphi_2\|_{L_\infty(\hat{t})} \leq Ch^3.$$

Numerical experiment

Consider the convection-diffusion problem:

$$
\begin{aligned}
-0.01\Delta u + \vec{b}\cdot\nabla u &= 0 \quad \text{in} \quad \Omega \\
u &= g \quad \text{on} \quad \Gamma_{in} \\
\frac{\partial u}{\partial n} &= 0 \quad \text{on} \quad \Gamma_{out} \\
u &= 0 \quad \text{on} \quad \partial\Omega \setminus (\Gamma_{in} \cup \Gamma_{out}).
\end{aligned}
$$

- $\vec{b} = (1, 0, 0)^T$ is the velocity field
- $g(x_2, x_3) = 16x_2(1 - x_2)x_3(1 - x_3)$

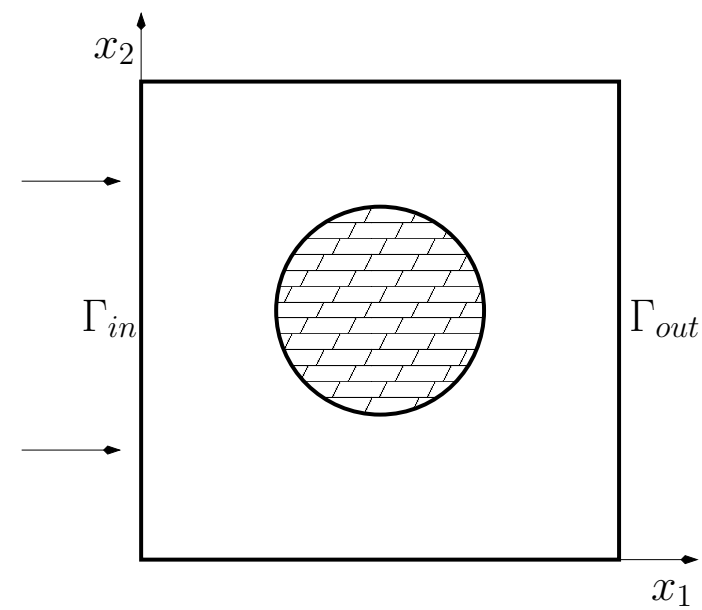

Numerical experiment (cont.)

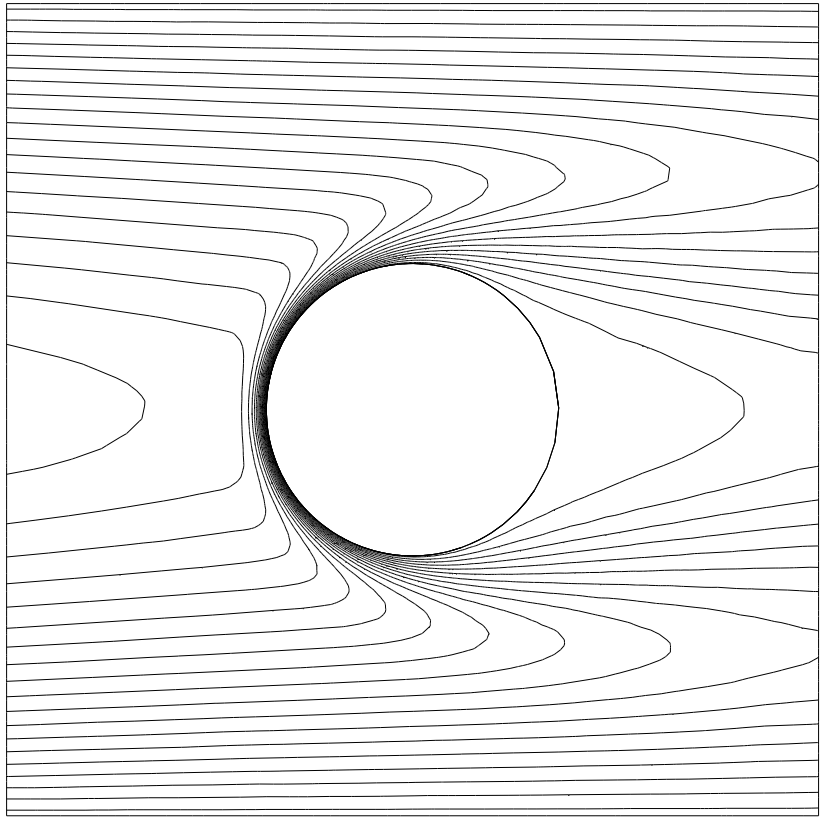

"exact" solution u

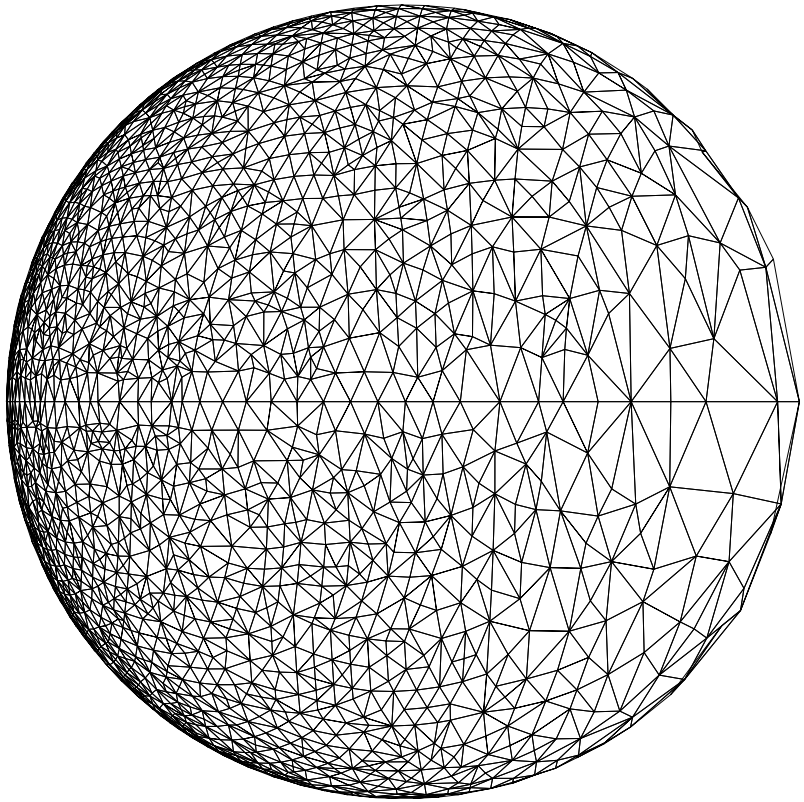

surface mesh

Analytic surfaces

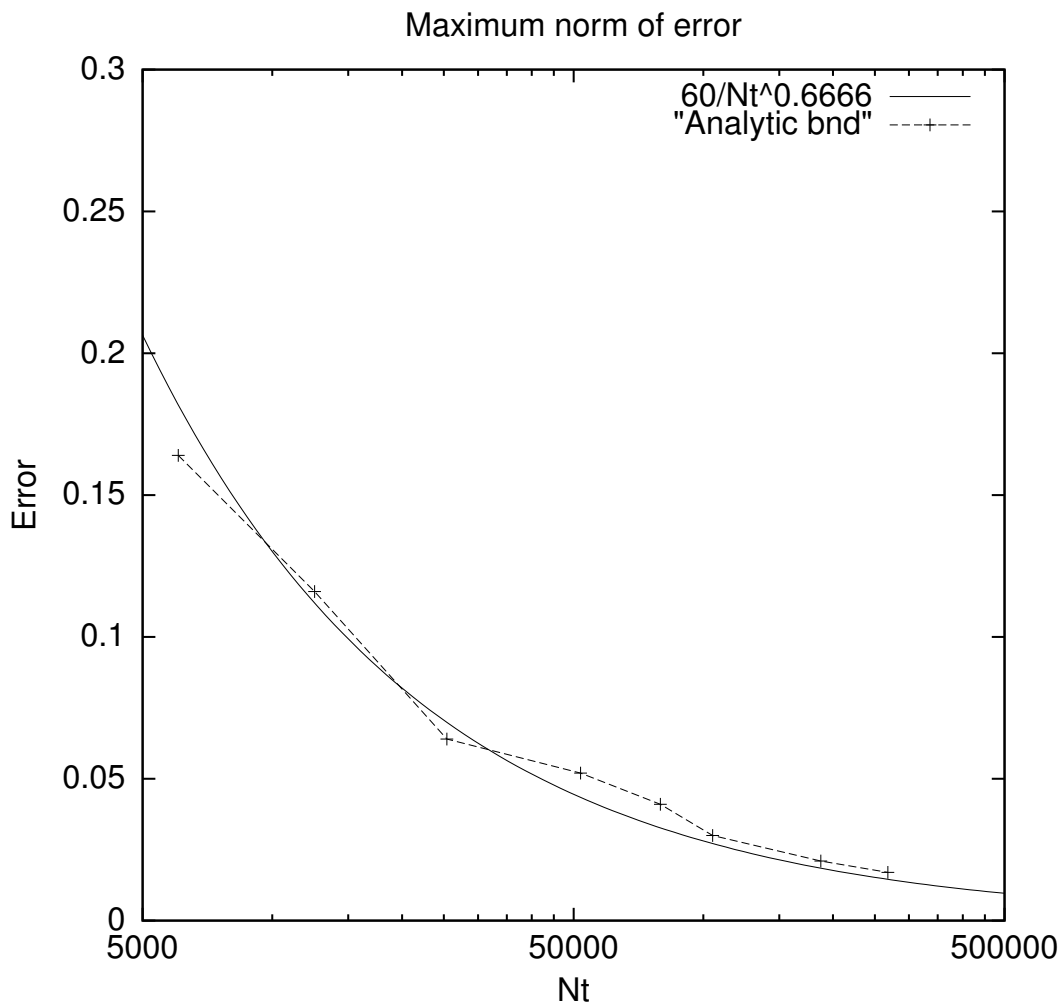

- Error fits the analytic curve

$$60\, N_t^{-2/3}.$$

- This confirms the theoretical prediction for polyhedral domains.

Discrete surfaces

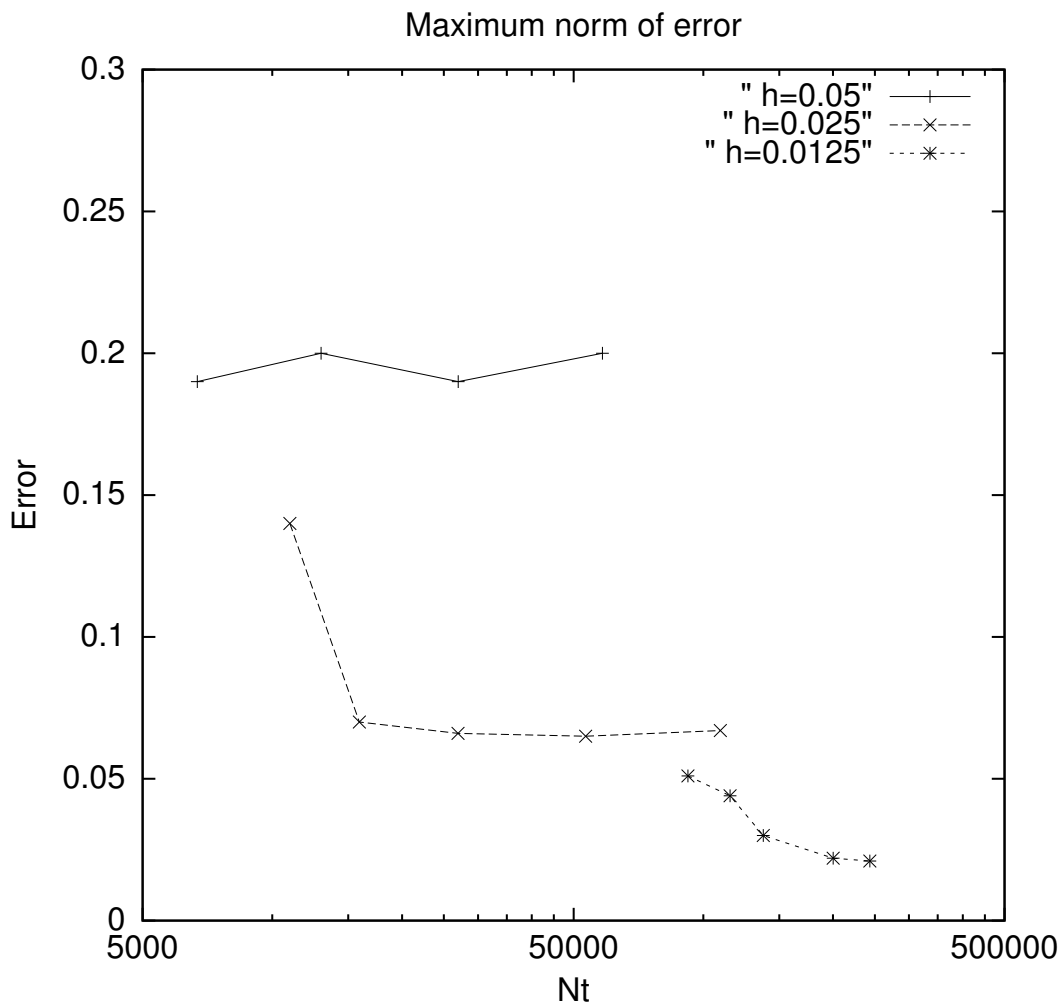

- Two refinements of quasi-uniform surface mesh.
- Saturation of L_∞ error $\sim h^2$
- There is no theoretical prediction of impact of the surface discretization on the solution error.

Discrete surfaces (cont.)

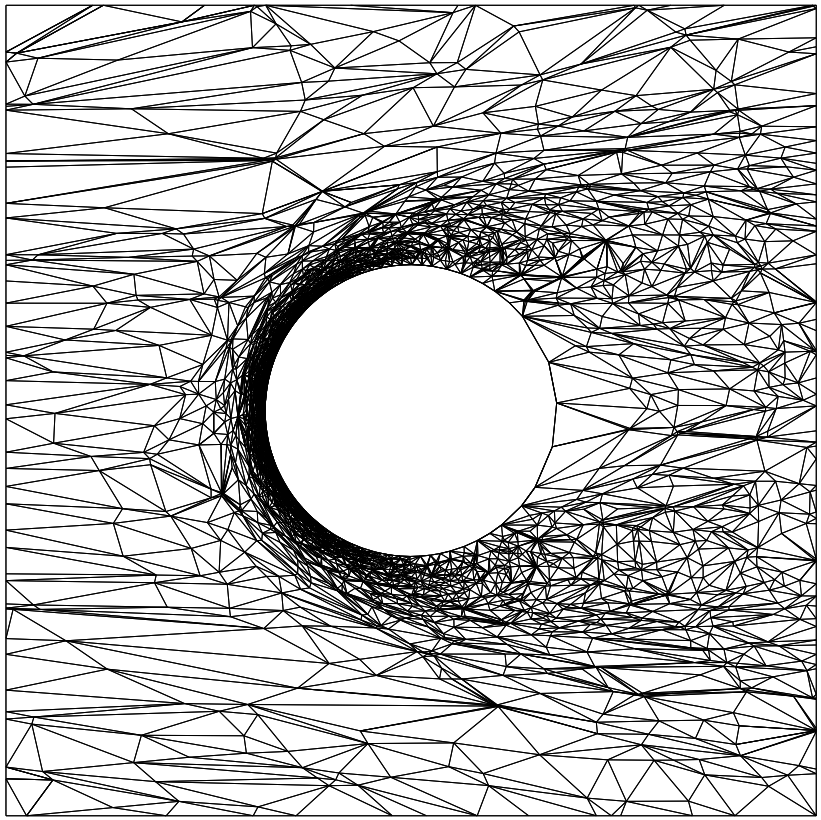

analytic boundary

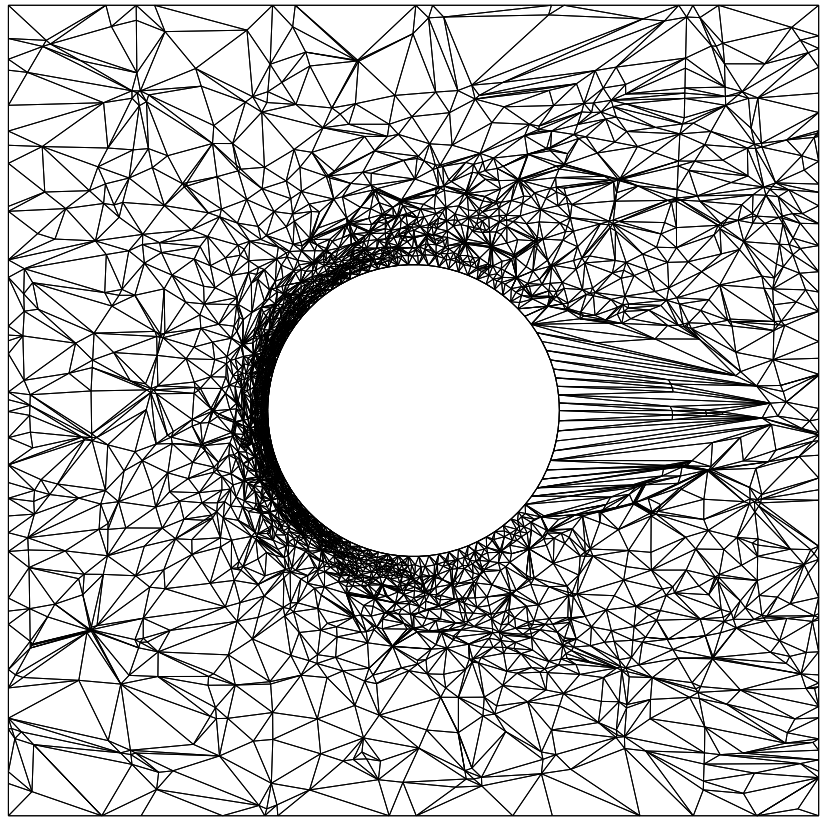

fixed boundary points

Reconstructed discrete surfaces

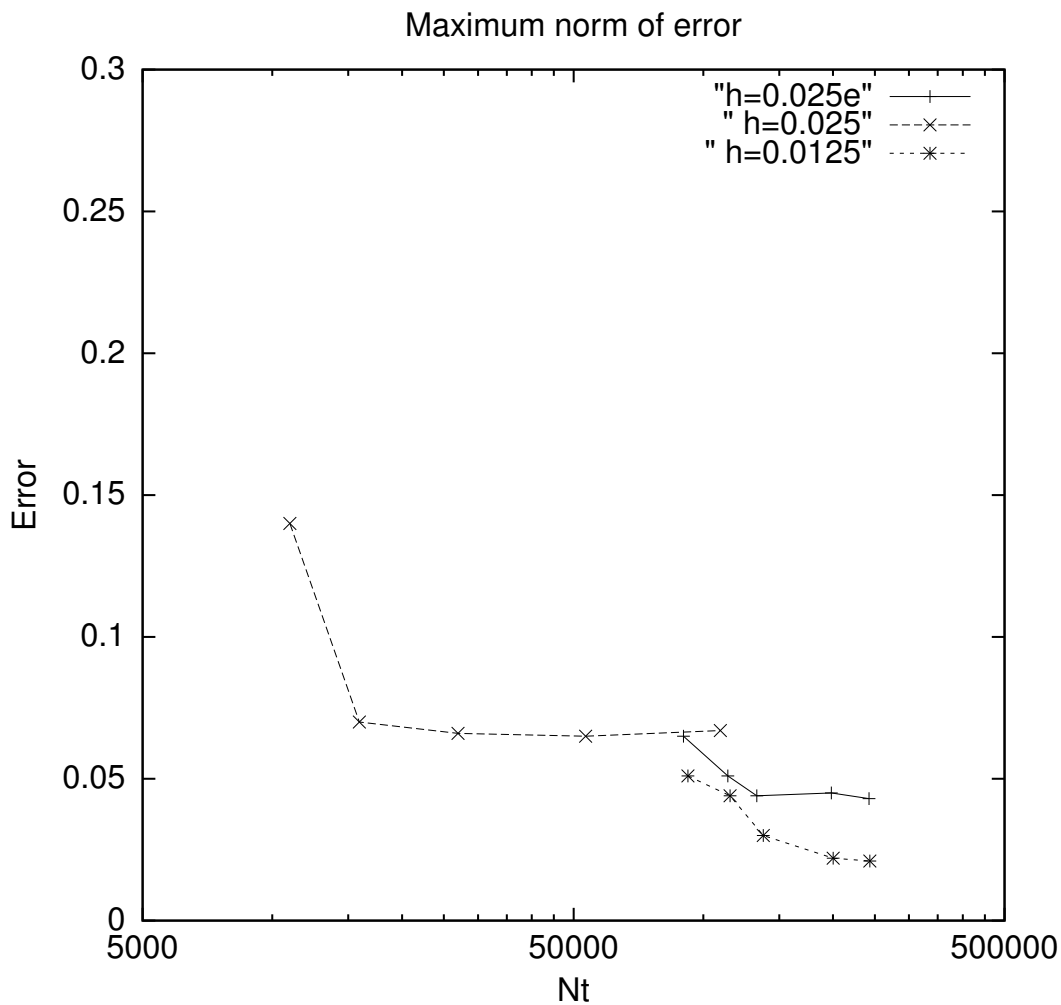

- The L_∞ error on reconstructed mesh is between errors for two uniformly refined surface meshes:

$$0.021 < 0.043 < 0.067.$$

- There is no theoretical results estimating the error drop on the reconstructed mesh.

Conclusion & Future plans

- We proposed and analyzed theoretically a new surface reconstruction technique.
- For a particular convection-diffusion problem, the saturation error is proportional to h^2.
- Future plans:
  1. Obtain theoretical estimates for the saturation error.
  2. Extend existing theoretical results to the energy norm.